深圳显旸光电科技有限公司 Shenzhen Xianyang Optoelectronic Technology Co., Ltd	DESIGN:(设计)	CHECKED:(检查)	APPROVED:(批准)	SPECIFICATION 规 格			
				CUSTOMER'S CODE:(客户型号)		EDITION:(版本号)	
Date:(日期) 2023.12.04	Page:(页数)	1/1	图纸视角:	XOT CODE:(料号)	XY013HQV8734ANT	EDITION:(版本号)	01

RoHS

正视图 侧视图 背视图

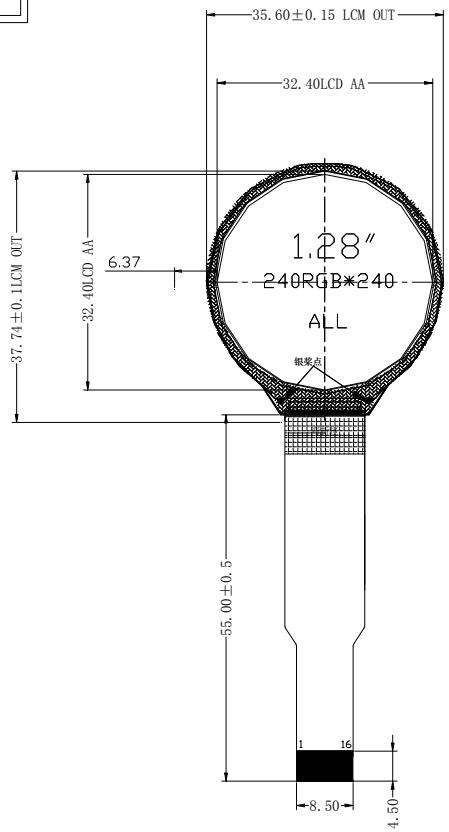

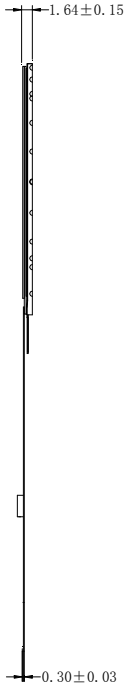

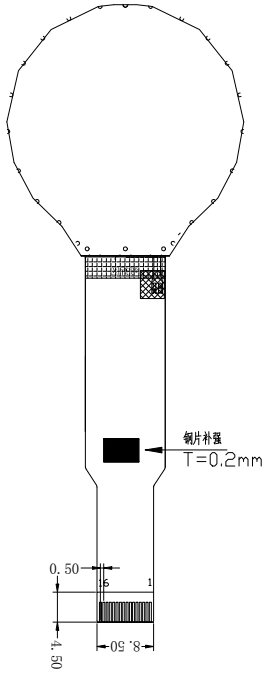

1	TP-VDD
2	TP-SCL
3	TP-SDA
4	TP-INT
5	TP-RESET
6	GND
7	/CS
8	RS
9	SCK
10	MOSI
11	/RESET
12	GND
13	VCC
14	IOVCC
15	A
16	K

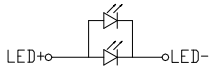

Vf=2.8-3.3V

If=40ma

Notes:

1. Unit:mm.
2. ⚠ Modification rev.number.
3. All radii without dimension R0.3mm.
4. All draft angles to be 1.5°
5. Unspecified Tolerances is :±0.20mm.
6. Driver IC:GC9A01
7. LCD Driver Voltage :
8. Color :White
9. Operating Temperature : -20° -- +70° C
10. Storage Temperature : -30° -- +80° C
11. Requirements on Environmental Protection: ROHS HSF

标示	日 期	更改内容	签 署

Customer Name: 客户名称		Approval Date: 承认日期		Approved By: 承认		Please Confirm This Drawing On/Before 请 签 回 此 图	