G code Instruction Set User Manual

(Technical Development Document)

Document version: V1.001

Release date: 2021/05/30

Copyright © Beijing Tsinew Technologies Co., Ltd. 2021. All rights reserved.

Without the written permission of the company, any unit or individual shall not excerpt, copy part or all of the content of this document without authorization, and shall not disseminate it in any form.

Disclaimer

To the maximum extent permitted by law, the products described in this manual (including its hardware, software, firmware, etc.) are provided "As-is" and may have defects, errors or malfunctions. Beijing Tsinew does not provide any form of express or implied warranty, nor does it compensate for any special, incidental or indirect damages caused by the use of this manual or the use of the company's products. Before using this product, please read this manual and related technical documents published on the Internet and learn more relevant information. Make sure to use this product under the premise of fully understanding the product-related knowledge.

The user of this product is responsible for following the laws and regulations of relevant countries and ensuring that there are no major dangers in the use of Beijing Tsinew robotic arms.

Revision Notes

Date	Version	Revision History
2021/05/30	V1.001	First draft（20210516 firmware）

Beijing Tsinew Technologies Co., Ltd.

Address: Room 1603, Zhongguancun Energy & Security Science Park, Building 3, Qinghua East Road 16 , Haidian District, Beijing

Official Website：cn.wlkata.com

目录

1. Instructions - 5 -

2. G code instruction set - 7 -

2.1 Movement instructions - 7 -

- 2.1.1Homing - 8 -
- 2.1.2 Return to zero (nominal zero position of each axis) - 8 -
- 2.1.3 Movement speed - 9 -
- 2.1.4 Cartesian mode - 9 -
- 2.1.5 Angle mode - 10 -
- 2.1.6 Motion mode - 10 -
- 2.1.7 Fast motion - 11 -
- 2.1.8 Linear interpolation motion - 11 -
- 2.1.9 Circular interpolation movement - 12 -
- 2.1.10 Timed pause - 13 -
- 2.1.11 Door-shaped trajectory movement - 14 -

2.2 Auxiliary instruction - 14 -

- 2.2.1 Unlock each axis - 14 -
- 2.2.2 Air pump/gripper control - 15 -
- 2.2.4 Status query - 16 -

3. Robotic arm parameter setting - 17 -

3.1 Related to homing - 18 -

3.2 DH parameters ..... - 19 -

3.3 Origin offset of base coordinate ..... - 19 -

3.4 Interpolation motion related ..... - 20 -

3.5 Tool coordinate system related ..... - 21 -

3.6 Stepper motor pulse equivalent setting ..... - 22 -

3.7 Stepper motor speed and acceleration settings ..... - 22 -

3.8 Workspace related ..... - 24 -

3.9 Calibration position parameters ..... - 26 -

3.10 Backlash compensation parameters ..... - 27 -

1. Instructions

1、 Mirobot uses a USB serial port for communication. The baud rate is 115200, the data bit is 8, and the stop bit is 1.

2、 Mirobot adopts instruction control based on G code.

3、 The letters in the instruction are not case sensitive.

4、 Mirobot can output two sets of PWM signals to control the gripper or suction cup.

5、 The user can send instructions to the robotic arm through WlkataStudio or serial port tools, and each instruction ends with a newline character'\n'.

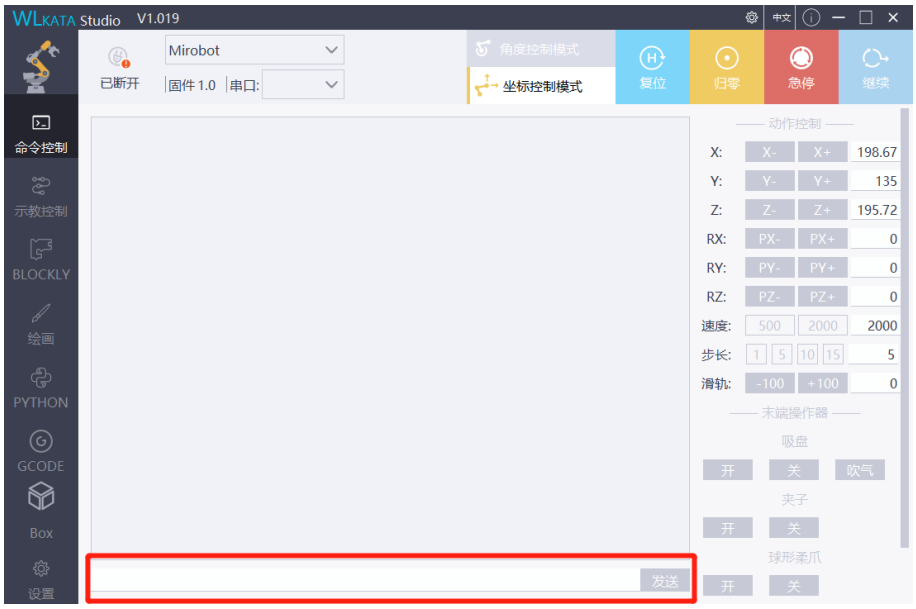

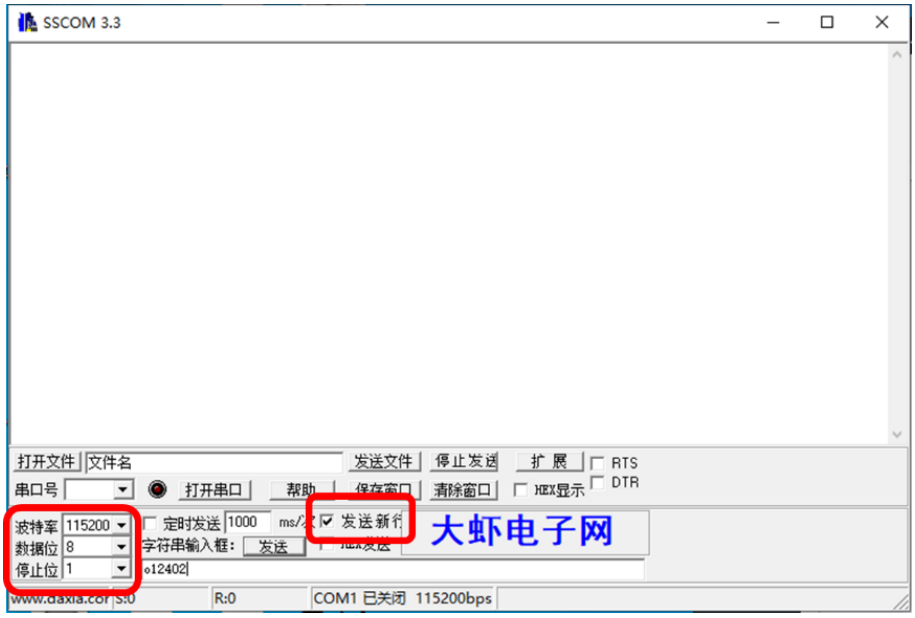
SSCOM 3.3
打开文件
文件名
发送文件
停止发送
扩 展
RTS
DTR
串口号
打开串口
帮助
保存窗口
清除窗口
HEX显示
波特率 115200
数据位 8
停止位 1
定时发送
1000
字符串输入框:
发送
o12402
大虾电子网
R:0
COM1 已关闭 115200bps

2. G code instruction set

2.1 Movement instructions

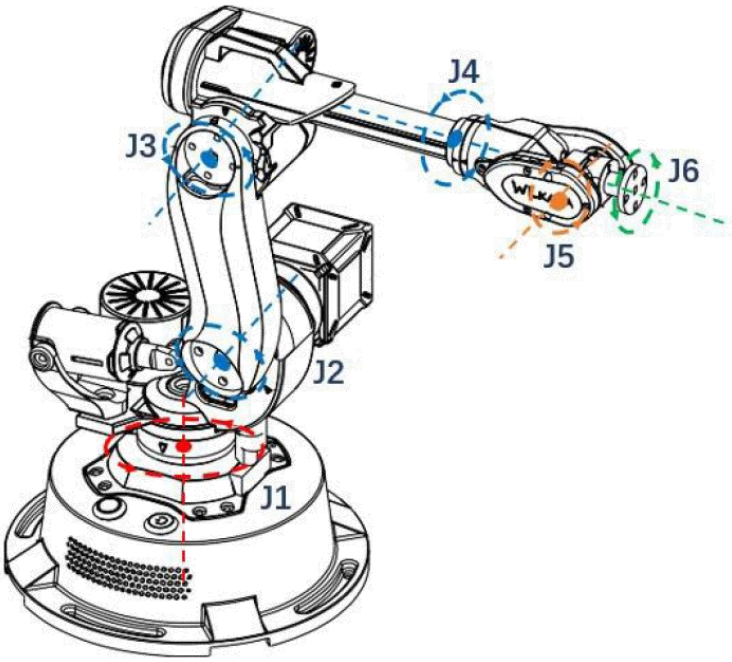

▲Figure: Mirobot joint coordinate system (the positive direction of each axis is shown by the arrow)

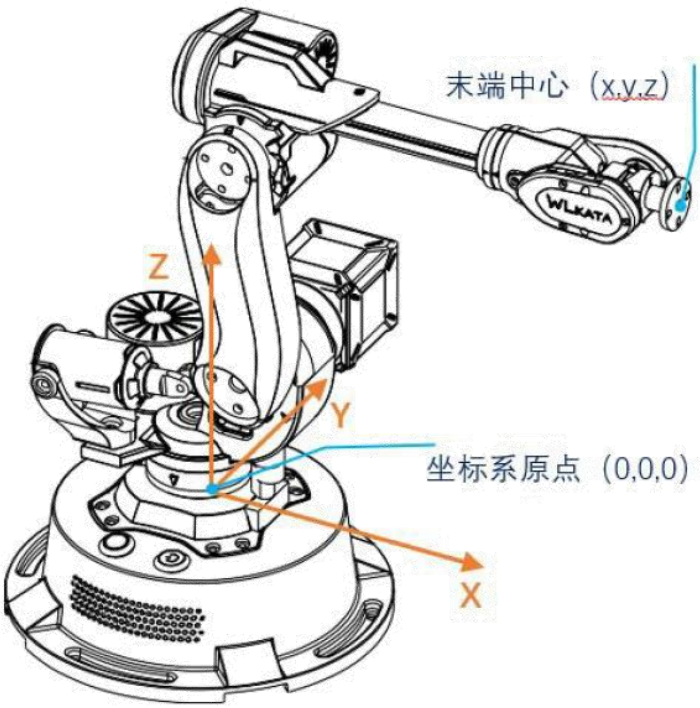

▲Figure: Mirobot Cartesian coordinate system

● 2.1.1Homing

Instruction	**$H{1}**
	Each axis returns to zero and move to the initial position (nominal zero position of each axis);
	{1}Mode: Default: quick return to zero (all axes return to zero synchronously); **H:** Return to zero in sequence (return to zero in sequence from axis 1 to axis 5); **7:** 7-axis return to zero (after the robot arm is quickly returned to zero, the 7-axis return to zero); **E:** Compact return to zero (first return to zero on axis 2, 3, and then return to zero on axis 1, 4, and 5 to avoid collide with objects around the robotic arm);
	Info, in homing moving...ok;
	$H The robotic arm quickly returns to zero;

● 2.1.2 Return to zero (nominal zero position of each axis)

Instruction	**$M**
Function	The manipulator moves quickly to the zero position (0 degree position of each axis in the angle mode);

Parameter	no;
Return	no;
Example	$M The robotic arm quickly moves to the zero position

● 2.1.3 Movement speed

Instruction	**F{1}**
Function	Set the movement speed of the end of the robotic arm in Cartesian mode; Except for G00 rapid movement, all other movement modes need to set the movement speed, otherwise the robot arm cannot execute the movement command normally and returns: Error, E113,Undefined feed rate;
Parameter	**{1}Speed: integer** (default 2000, unit mm/min);
Return	no;
Example	F2000 Set the movement speed of the end of the robotic arm in the Cartesian mode to 2000mm/min

● 2.1.4 Cartesian mode

Instruction	**M20**
Function	Switch to Cartesian mode (set the pose parameters of the end of the

	robotic arm relative to the base coordinate);
Parameter	no;
Return	Info, M20: Cartesian mode start.;
Example	M20

● 2.1.5 Angle mode

Instruction	**M21**
Function	Switch to angle mode (set the rotation angle of each axis);
Parameter	no;
Return	Info, M21: Angle mode start.
Example	M21

● 2.1.6 Motion mode

Instruction	**G90/G91**
Function	Absolute value motion/incremental value motion;
Parameter	no;
Return	No;
Example	M21 G90 X10 Control 1 axis to move to 10 degree position; M21 G91 Y10 Control the 2 axis to rotate 10 degrees in the positive direction;

● 2.1.7 Fast motion

Instruction	G00
Function	Control each axis of the robotic arm to move at the set maximum speed;
Parameter	no;
Return	no;
Example	M20 G90 G00 X180 Y50 Z150 Control the end of the robotic arm to quickly move to the xyz (180, 50, 150) position in the base coordinate system in Cartesian mode;

● 2.1.8 Linear interpolation motion

Instruction	G01
Function	Linear interpolation motion (The end motion trajectory is a straight line); The relevant parameters of the interpolation mode are set to $35, $36, please refer to the next section; When using it, please note that the working space of the robotic arm is circular. When the trajectory exceeds the working space, the robotic arm

	cannot execute the instruction normally, even if the starting point A and target point B are both in the working space. (As shown in the figure below), in this case, please use G00 to move quickly; 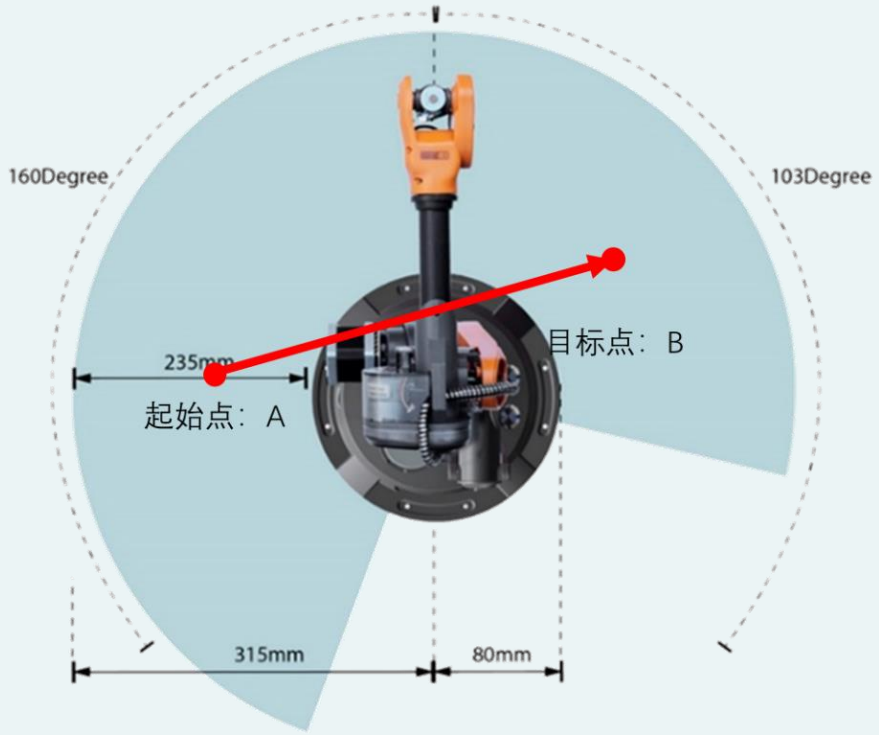
Parameter	no;
Return	No;
Example	M20 G90 G01 X250 Z100 F1000 In the Cartesian mode, control the mechanical arm to linearly interpolate to the position of xyz (250, 0, 100) in the base coordinate system at a speed of 1000 mm/min;

● 2.1.9 Circular interpolation movement

Instruction	**G02/G03 R{1}**

Function	Clockwise circular interpolation/Counterclockwise circular interpolation (XY plane); 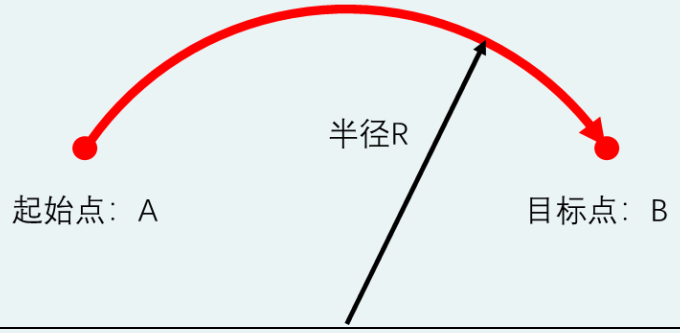
Parameter	**{1}Radius: floating point number**（mm）;
Return	no;
Example	M20 G91 G03 X60 Y0 Z0 R60 Control the robotic arm to draw a circular arc (minor arc) with a radius of 60mm clockwise with the relative coordinate xyz (60,0,0) as the end point; The distance between the start point and the end point should be less than or equal to 2 times the arc radius value (arc diameter). Otherwise, the robot arm returns: Error, E116,Arc radius error

● 2.1.10 Timed pause

Instruction	**G04 P{1}**
Function	Timed pause;
Parameter	**{1}Time: Floating point number**（s）;
Return	No;
Example	G04 P1.5

	Pause for 1.5 seconds;

● 2.1.11 Door-shaped trajectory movement

Instruction	**G05**
Function	Door-shaped trajectory movement; 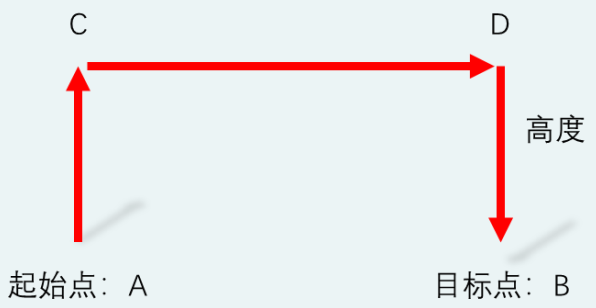 The door-shaped trajectory height parameter is set by $49, please refer to the next section;
Parameter	no;
Return	No;
Example	M20 G90 G05 X198.6 Y0 Z165.7 A-20 B-60 C0 In Cartesian mode, control the end of the robotic arm to move the door-shaped trajectory to the position of xyz (250, 0, 100) and the position of (-20, -60, 0) RPY angle in the base coordinate system;

2.2 Auxiliary instruction

● 2.2.1 Unlock each axis

Instruction	**M50**

Function	Release the lock state of axes after power-on; The robotic arm must be "homing" before use. In order to prevent errors caused by direct movement of the robotic arm without homing operation, we set each axis to be locked after power-on. The locked state can only be released after homing operation. M50 instruction is used to directly unlock each axis.
Parameter	no;
Return	Info, M50: Unlock each axis.
Example	M50 unlock;

● 2.2.2 Air pump/gripper control

Instruction	**M3 S{1}**
Function	Open or close the air pump/gripper (specify the PWM output value of air pump control);
Parameter	**{1}Status: 0:** Turn off the air pump; **500:** Air pump blowing; **1000:** Air pump suction; **40:** Open the gripper; **60:** Close the gripper;
Return	no

Example	M3S500 Air pump blowing;

● 2.2.4 Status query

Instruction	**? (English input method)**
Function	Obtain the current state and position information of the robotic arm;
Parameter	no;
Return	<Idle,Angle(ABCDXYZ):{A},{B},{C},{D},{X},{Y},{Z},Cartesian coordinate(XYZ RxRyRz):{X},{Y},{Z},{Rx},{Ry},{Rz},Pump PWM:{PWM1},Value PWM:{PWM2}> Idle indicates that the arm is in idle state, and angle (ABCDXYZ) is followed by the angle values of each axis of the robotic arm. The order is: the fourth axis {A}, the fifth axis {B}, the sixth axis {C}, the external slide rail {D} (if installed), the first axis {X}, the second axis {Y}, and the third axis {Z} (the positions of each axis are shown in Figure 1). Cartesian coordinate (XYZ RxRyRz) is followed by the position and posture of the end of the manipulator (the coordinate system of the manipulator is shown in Figure 2), {X}, {Y}, {Z} represents the X-Y-Z coordinate value, {Rx}, {Ry}, {Rz} represents the posture (RPY angle). {PWM1}, {PWM2} are two sets of PWM values output by the robotic arm.
Example	?

返回值: <Alarm,Angle(ABCDXYZ):0.000,0.000,0.000,0.000,0.000,0.000,0.000,Cartesian coordinate(XYZ RxRyRz):198.670,0.000,230.720,0.000,0.000,0.000,Pump PWM:0,Valve PWM:0,Motion_MODE:0> Return value description: Alarm indicates that the robotic arm is locked. After Angle (ABCDXYZ) is the angle value of each axis of the robotic arm, the fourth axis is 0°, the fifth axis is 0°, the sixth axis is 0°, and the external slide rail (if any) 0, the first axis is 0°, the second axis is 0°, and the third axis is 0°. Cartesian coordinate (XYZ RxRyRz) is followed by the position and posture of the end of the robotic arm, the position is (198.67, 0, 230.72), the posture is (0, 0, 0), and the two output PWM values are both 0.

3. Robotic arm parameter setting

The hardware parameter setting instruction of Mirobot robotic arm is composed of "$" + ""number", and the setting method is the same as the previous section; before setting, send "$$" to the robotic arm to get the current parameter information, as shown in the figure below. Send "$+number=number" when modifying the value, for example, turn off linear interpolation: "$35=0". It will take effect immediately after the modification, and it will be saved after power-off. The following will explain each parameter separately according to the function;

```
$$
$0=10 (step pulse, usec)
$1=0 (step idle delay, msec)
$2=0 (step port invert mask:00000000)
$3=127 (dir port invert mask:01111111)
$4=0 (step enable invert, bool)
$5=0 (limit pins invert, bool)
$6=0 (probe pin invert, bool)
```

3.1 Related to homing

Command	Function	Parameter	Unit
$22	Whether the homing action is enabled;	0 off；1 on (default on)	
$23	The homing direction of each axis; 8 binary numbers correspond to: empty, 4 axis, 5 axis, 6 axis, 7 axis, 1 axis, 2 axis, 3 axis in sequence.	Corresponding decimal value; Example（00110000）：48	
$24	Slow homing speed, that is, the speed when each axis touches the travel switch multiple times when returning to zero;	Speed（default 1500.000）	mm/min
$25	Fast homing speed, that is, the speed at which each axis touches the travel switch from the current locked position when returning to zero;	Speed（default 2000.000）	mm/min
$26	Switch anti-shake time, the waiting time of each axis after touching the limit switch;	Time（default 250）	ms
$27	When homing, the retreat angle of each axis after repeatedly touching the travel switch;	Angle（default 12）	deg
$28	The movement direction of each axis after homing;8 binary numbers correspond to: empty, 4 axis, 5 axis, 6 axis, 7 axis, 1 axis, 2 axis, 3 axis in sequence;	Corresponding decimal value; Example（01000001）：65	

3.2 DH parameters

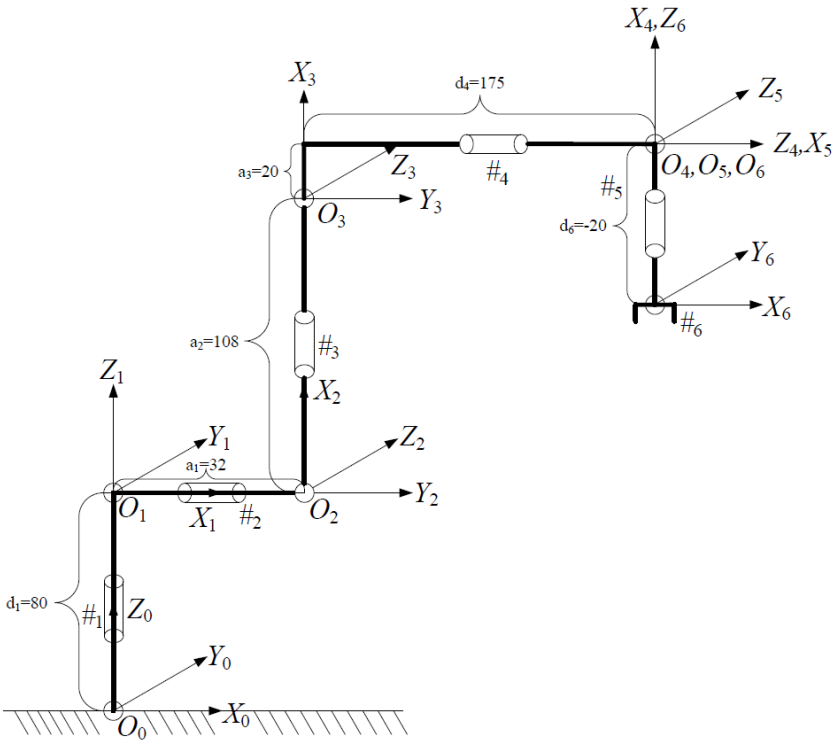

Note: The length of each connecting rod in the figure is for reference only, and does not represent the actual value

Command	Function	Parameter	Unit
$29	D1 connecting rod length;	length（default 127）	mm
$30	A1 connecting rod length;	length（default 29.69）	mm
$31	A2 connecting rod length;	length（default 108）	mm
$32	A3 connecting rod length;	length（default 20）	mm
$33	D4 connecting rod length;	length（default 168.98）	mm
$34	D6 connecting rod length;	length（default-24.28）	mm

3.3 Origin offset of base coordinate

The original coordinate origin of the robotic arm is in the center of the circular base, which cannot be reached by the robotic arm. In software such as laser engraving, the issued coordinates are relative to this

origin, so it is very inconvenient to use. The following three offsets are used to adjust the offset of the origin in the direction of the XYZ coordinate axis, so as to move the position of the origin of the robotic arm.

Command	Function	Parameter	Unit
$41	X direction offset;	distance（default 0）	mm
$42	Y direction offset;	distance（default 0）	mm
$43	Z direction offset;	distance（default 0）	mm

3.4 Interpolation motion related

Command	Function	Parameter	Unit
$35	G01 linear interpolation switch setting;	0 off；1 on（default on）	
$36	Number of interpolation points;	number（default 10）	number
$49	G05 door shape lifting height;	distance（default 30）	mm

3.5 Tool coordinate system related

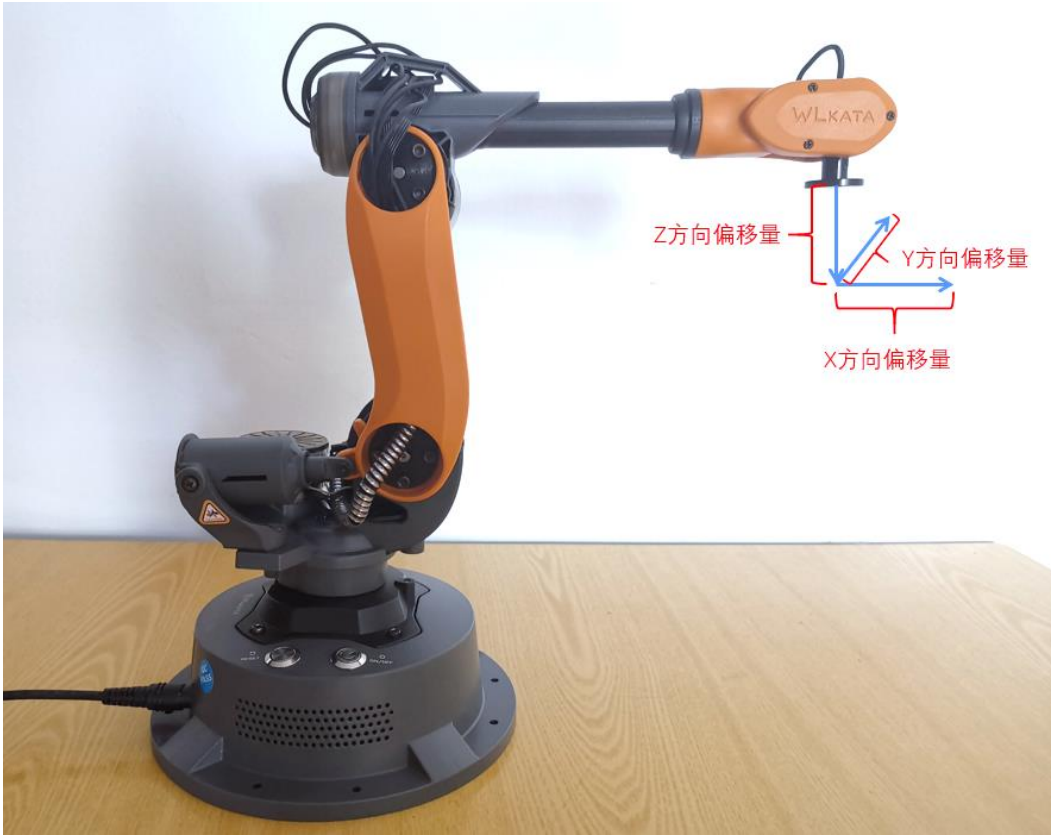

The tool coordinate origin is the center point of the flange bottom at the end of the sixth joint by default.If you install other tools, you can select a point on the tool as a reference point and set its XYZ offset relative to the center of the flange. Then the end pose of the robotic arm in Cartesian coordinate mode is the pose of this point.

Command	Function	Parameter	Unit
$46	X direction offset;	distance（default 0）	mm
$47	Y direction offset;	distance（default 0）	mm
$48	Z direction offset;	distance（default 0）	mm
$50	Set the end tool; (Automatically preset $46, $47, $48 after setting)	0：No tool; 1：Suction cup; 2：gripper; 3：Three-finger soft gripper	

3.6 Stepper motor pulse equivalent setting

This group of parameters is related to the reduction ratio of each axis. Please do not modify it if not necessary;

Command	Function	Parameter	Unit
$100	4-axis stepper motor pulse equivalent setting	step number (default 32.000)	step/deg
$101	5-axis stepper motor pulse equivalent setting	step number (default 22.712)	step/deg
$102	6-axis stepper motor pulse equivalent setting	step number (default 11.356)	step/deg
$103	7-axis stepper motor pulse equivalent setting	step number (default 211.111)	step/deg
$104	1-axis stepper motor pulse equivalent setting	step number (default 38.482)	step/deg
$105	2-axis stepper motor pulse equivalent setting	step number (default 113.100)	step/deg
$106	3-axis stepper motor pulse equivalent setting	step number (default 40.000)	step/deg

3.7 Stepper motor speed and acceleration settings

Command	Function	Parameter	Unit
$110	4-axis stepper motor speed setting	speed (recommended to be less than 5000)	deg/min
$111	5-axis stepper motor speed setting	speed (recommended to be less than 5000)	deg/min

$112	6-axis stepper motor speed setting	speed (recommended to be less than 5000)	deg/min
$113	7-axis stepper motor speed setting	speed (recommended to be less than 2500)	deg/min
$114	1-axis stepper motor speed setting	speed (recommended to be less than 3000)	deg/min
$115	2-axis stepper motor speed setting	speed (recommended to be less than 3000)	deg/min
$116	3-axis stepper motor speed setting	speed (recommended to be less than 3000)	deg/min
$120	4-axis stepper motor acceleration setting	accelerated speed (recommended to be less than 500)	deg/sec^2
$121	5-axis stepper motor acceleration setting	accelerated speed (recommended to be less than 500)	deg/sec^2
$122	6-axis stepper motor acceleration setting	accelerated speed (recommended to be less than 500)	deg/sec^2
$123	7-axis stepper motor acceleration setting	accelerated speed (recommended to be less than 500)	deg/sec^2
$124	1-axis stepper motor acceleration	accelerated speed	deg/sec^2

	setting	(recommended to be less than 500)	
$125	2-axis stepper motor acceleration setting	accelerated speed (recommended to be less than 500)	deg/sec^2
$126	3-axis stepper motor acceleration setting	accelerated speed (recommended to be less than 500)	deg/sec^2

3.8 Workspace related

After the movement of the robotic arm triggers the soft limit, the robotic arm stops moving. The restriction can be lifted by moving in the opposite direction;

After the robotic arm triggers the hard limit, the robotic arm is locked and needs to be restarted;

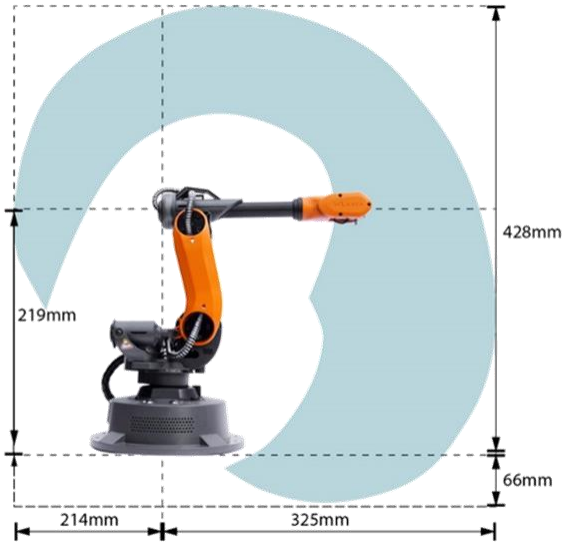

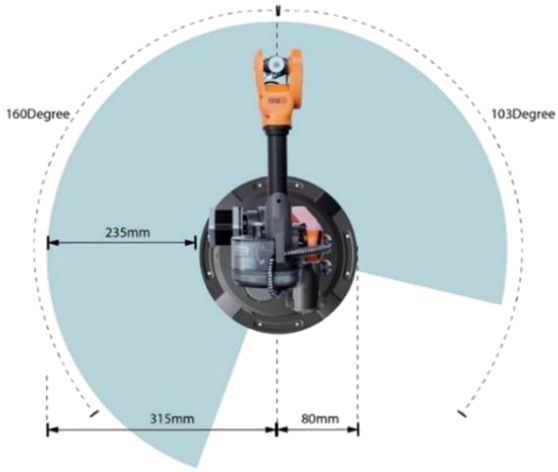

Command	Function	Parameter	Unit
$20	Software limit switch setting;	0 off; 1 on (default on)	
$21	Hard limit switch setting;	0 off; 1 on (default on)	

$130	Maximum travel in the positive direction of the 4-axis;	angle（default 350）	deg
$131	Maximum travel in the positive direction of the 5-axis;	angle（default 36）	deg
$132	Maximum travel in the positive direction of the 6-axis;	angle（default 360）	deg
$133	Maximum travel in the positive direction of the 7-axis;	angle（default 500）**Slide mode**	deg
$134	Maximum travel in the positive direction of the 1-axis;	angle（default 160）	deg
$135	Maximum travel in the positive direction of the 2-axis;	angle（default 70）	deg
$136	Maximum travel in the positive direction of the 3-axis;	angle（default 60）	deg
$140	Maximum travel in the negative direction of the 4-axis;	angle（default 350）	deg
$141	Maximum travel in the negative direction of the 5-axis;	angle（default 205）	deg
$142	Maximum travel in the negative direction of the 6-axis;	angle（default 360）	deg
$143	Maximum travel in the negative direction of the 7-axis;	angle（default 0）**Slide mode**	deg
$144	Maximum travel in the negative direction of the 1-axis;	angle（default 100）	deg
$145	Maximum travel in the negative direction of the 2-axis;	angle（default 30）	deg
$146	Maximum travel in the negative direction of the 3-axis;	angle（default 170）	deg

3.9 Calibration position parameters

After homing, the robotic arm moves to the initial posture (the big arm is upright, the forearm is horizontal), and the position of each axis in the current posture is specified as the 0 degree position. The angle that each axis moves from the position where the travel switch is triggered to the current position is the calibration position parameter. When adjusting the calibration position parameters, you can observe whether the calibration marks of each axis are aligned. There is no travel switch on the 6th axis, so calibration is not required for it. The position when the 6 axis is powered on is defaulted as its 0 degree position. If you need to adjust it, you can rotate it through the software or manually adjust it.

第 1 轴刻度

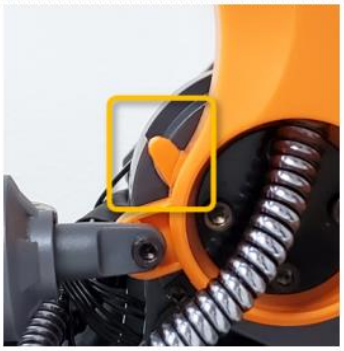

第 2 轴刻度

第 3 轴刻度

第 4 轴刻度

第 5 轴刻度

Command	Function	Parameter	Unit
$150	4-axis calibration position parameters;	angle（default 73）	deg

$151	5-axis calibration position parameters;	angle（default 30）	deg
$152	6-axis calibration position parameters;	angle（default 0）	deg
$153	7-axis calibration position parameters;	angle（default 0）	deg
$154	1-axis calibration position parameters;	angle（default 100）	deg
$155	2-axis calibration position parameters;	angle（default 32）	deg
$156	3-axis calibration position parameters;	angle（default 57）	deg

3.10 Backlash compensation parameters

Mechanical structures such as the reducer of each axis of the mechanical arm have repetitive errors during the movement, which can be compensated by setting;

Command	Function	Parameter	Unit
$150	Backlash compensation switch setting;	0 off；1 on（default off）	
$160	4-axis backlash compensation parameters;	angle（default 0）	deg
$161	5-axis calibration position parameters;	angle（default 0）	deg
$162	6-axis calibration position parameters;	angle（default 0）	deg
$163	7-axis backlash compensation parameters;	angle（default 0）	deg
$164	1-axis backlash compensation parameters;	angle（default 0）	deg

$165	2-axis backlash compensation parameters;	angle（default 0）	deg
$166	3-axis backlash compensation parameters;	angle（default 0）	deg

Official Wechat Account